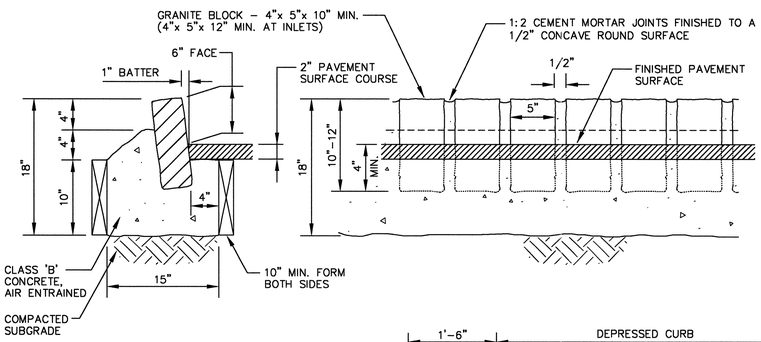

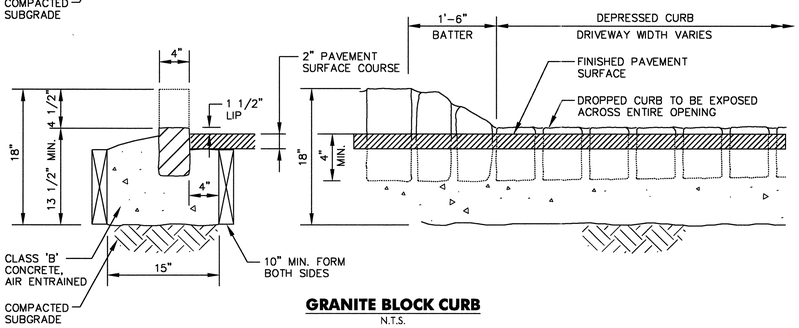

GRANITE BLOCK CURB

N.T.S.

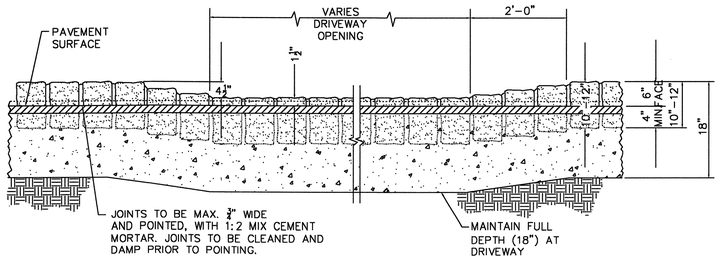

DEPRESSED GRANITE BLOCK CURB AT DRIVEWAY

N.T.S.

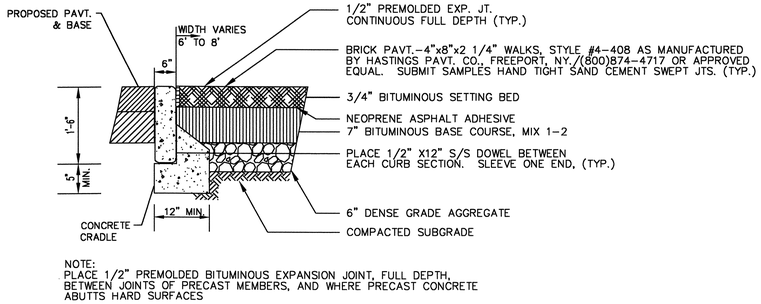

NOTE:
PLACE 1/2" PREMOLDED BITUMINOUS EXPANSION JOINT, FULL DEPTH, BETWEEN JOINTS OF PRECAST MEMBERS, AND WHERE PRECAST CONCRETE ABUTTS HARD SURFACES

BRICK PAVER CROSSWALK

N.T.S.

The Learning Experience
Illuminated Building Signage

Pan Channel Lettering - Facade Mounted - Remote Wiring
Internal White LED Illumination - 120 volts AC
White 3/16 in. Acrylic Cap with Black Jewelite Trim
Translucent Vinyl Film Applied as per specified colors
Magenta, Yellow, Orange, Green

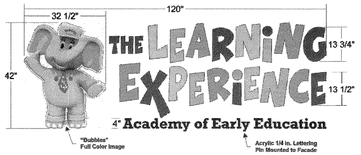

Raceway Sign & Installation

Constructed as per NEC
UL Listed & Labeled

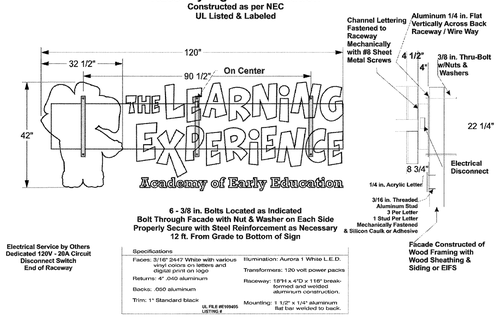

Specifications

Faces: 3/16" 2447 White with various vinyl colors on letters and digital print on logo

Returns: 4" .040 aluminum

Backs: .050 aluminum

Trim: 1" Standard black

Illumination: Aurora 1 White L.E.D.

Transformers: 120 volt power packs

Raceway: 18"H x 4"D x 118" break-formed and welded aluminum construction.

Mounting: 1 1/2" x 1/4" aluminum flat bar welded to back.

UL FILE #E193895
LISTING #

PERMANENT SIGN DETAIL

N.T.S.

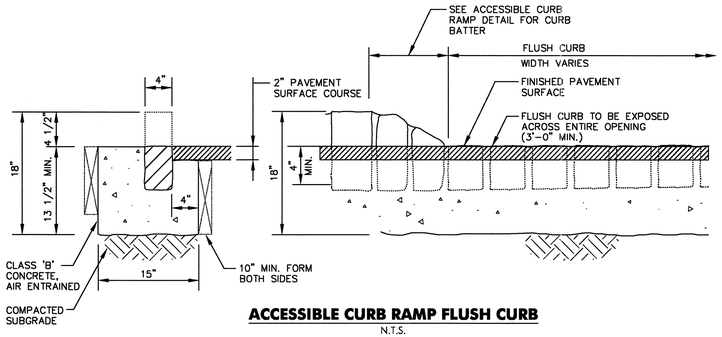

ACCESSIBLE CURB RAMP FLUSH CURB

N.T.S.

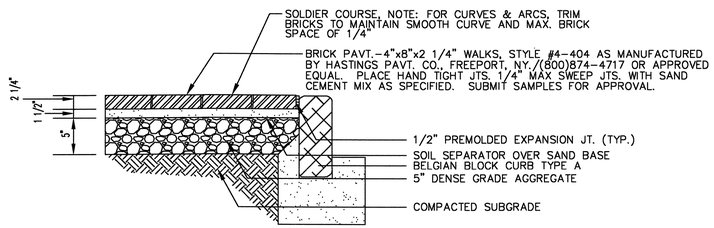

BRICK PAVEMENT TYPE 'A' (SAND BASE)

N.T.S.

PRIOR TO INSTALL
- ALL MEASUREMENTS NEED TO BE CHECKED TO VERIFY MATERIALS WILL FIT ACCORDING TO THE INSTALL AS LAYED OUT.
- INSPECT ALL SURFACES. NOTE ANY IMPERFECTIONS BEFORE APPLYING MATERIALS.

- CONTACT LOCAL CLIENT AND ARRANGE FOR INSTALLATION. PLEASE MAKE SURE THE CLIENT WILL BE PRESENT SO THEY CAN SPOT THE EXACT LOCATION THEY WANT THE SIGN INSTALLED AT.

DURING INSTALL
- VINYL NEEDS TO BE BUBBLE FREE WITH NO RIPS OR CUTS.
- ALL SIGNAGE NEEDS TO HAVE CORRECT PLACEMENT.
- LEVELS NEED TO BE USED ON APPLICABLE ITEMS.
- ALL APPLICABLE AREAS NEED TO BE PROTECTED FROM DUST, DEBRIS, ETC.

AFTER INSTALL
- SITE MUST BE CLEANED AND LEFT IN THE SHAPE IT WAS IN PRIOR TO INSTALL.
- COMPLETION PHOTOS NEED TO BE TAKEN OF EACH SIGN INSTALLED.
- ONSITE CLIENT NEEDS TO SIGN OFF ON INSTALLATION (SIGNATURE AREA ON LAST PAGE)

TEMPORARY SIGN DETAIL

N.T.S.

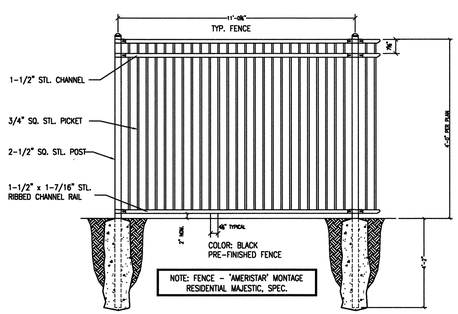

ORNAMENTAL ALUMINUM FENCE & GATE

N.T.S.

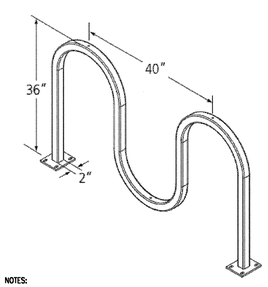

NOTES:

1. BIKE RACK TO BE AMERICAN BICYCLE SECURITY COMPANY OR EQUAL.
2. PRODUCT SHALL BE SURFACE MOUNTED WITH 5.25" X 5.5" SURFACE PLATES AND FOUR (4) S.S. STEEL ANCHOR BOLTS PER PLATE.
3. BICYCLE RACK TO BE POWDER COATED ALUMINUM WITH A FLAT BLACK FINISH.

BICYCLE RACK (5 BIKES)

N.T.S.

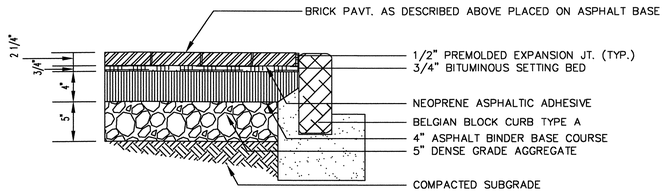

BRICK PAVEMENT TYPE 'B' (BITUMINOUS BASE) IN ROAD CROSSING

N.T.S.

Jarmel Kizel
ARCHITECTS AND ENGINEERS INC.
42 OKNER PARKWAY
LIVINGSTON, NEW JERSEY 07039
TEL: 973-994-9669
FAX: 973-994-4069
www.jarmelkizel.com

Architecture
Engineering
Interior Design
Implementation Services

ISSUE

NO.	DATE	DESCRIPTION	INT.
1	1.17.19	FOR COMPLETENESS REVIEW	GPG
2	4.16.19	FOR MAY 6TH HEARING	GPG
3	5.17.19	FOR 6.3.19 PLANNING BOARD	GPG

REVISION

NO.	DATE	DESCRIPTION	INT.
1	4.10.19	ADD BIKE RACK\PERIMTER FENCE	GPG
2	5.8.19	PER MAY 4, 2019 REVIEW MEMO	APP

PRINCIPALS
MATTHEW B. JARMEL, AIA, MBA — AZ LIC 48159; CO LIC ARC-401483; CT LIC ARL0011415; DC LIC ARC101849; DE LIC S5-0007256; FL LIC AR98965; GA LIC RA011484; IA LIC 05577; IL LIC 001-020069; MA LIC AR102896; MD LIC 12662; MI LIC 1301002189; NJ LIC AIO-12787; MN LIC 46404; NC LIC 10120; NH LIC 3501; NY LIC 024673; OH LIC A-99-12444; PA LIC RA-014851-B; RI LIC ARC.0004765; SC LIC AR9163; TN LIC 103850; TX LIC 20992; VA LIC 0401-014089; VT LIC 2453
IRWIN H. KIZEL, AIA, PP — CT LIC 08522; NJ LIC 21AI00794700; NJ PP LIC 33UI00243100
RICHARD A. JARMEL, PE — CT LIC PEN0027735; FL LIC 83149; MI LIC 6201100339; DE LIC 18754; VT LIC 88498; NJ LIC 37491; MN LIC 47482; NY LIC 075898-1; PA LIC PE075600; MA LIC 50445; TX LIC 123822
ASSOCIATES
RONALD A. BROKENSHIRE, PE — CT LIC PEN0032811; NJ LIC GE45511; PA LIC PE069317
DAVID L. LESSING, PE — FL LIC 42011748; NJ LIC 46131; PA LIC 084703
MICHAEL J. VORLAND, RA — NY LIC 036993; PA LIC RA-005081
GERARD P. GESARIO, PE — NJ LIC GE038255
FREDERICK KINCAID, RA — NJ LIC 21AI01829-4
JEROME LESLIE EBEN, FAIA, PP — NJ LIC AI 8083; PA LIC RA-016000-B; VA LIC 0401 012073; NY LIC 019151
CHERYL SCHWEIKER, AIA — NJ LIC 21AI00609000; PA LIC RA027927
NJ State Board Of Architects Authorization No. 16L
NJ State Board Of Engineers & Land Surveyors Authorization No. 24GA28053000

Project: THE LEARNING EXPERIENCE
109 & 115 SOUTH ORANGE AVENUE WEST
TOWNSHIP OF SOUTH ORANGE VILLAGE
ESSEX COUNTY, NJ
BLOCK 1904, LOTS 16&17

Project No: TLENJ-S-17-264
Scale: AS NOTED
Drawn By: LB
Approved By: GPG

Drawing Name: DETAIL SHEET

Drawing Number: C-902

Sheet No: 11 of: 13

Initial Date: JANUARY 3, 2019

GERARD P. GESARIO
PROFESSIONAL ENGINEER
N.J. LIC. #GE038255

S:\PROJECTS\TLENJ-S-17-264 TLE SOUTH ORANGE NJ\CAD\17-264 C-902 DETAIL SHEET.DWG APROTOPAPAS PLOTTED: 05/17/2019